CRESTIAL™
Wasser Musik

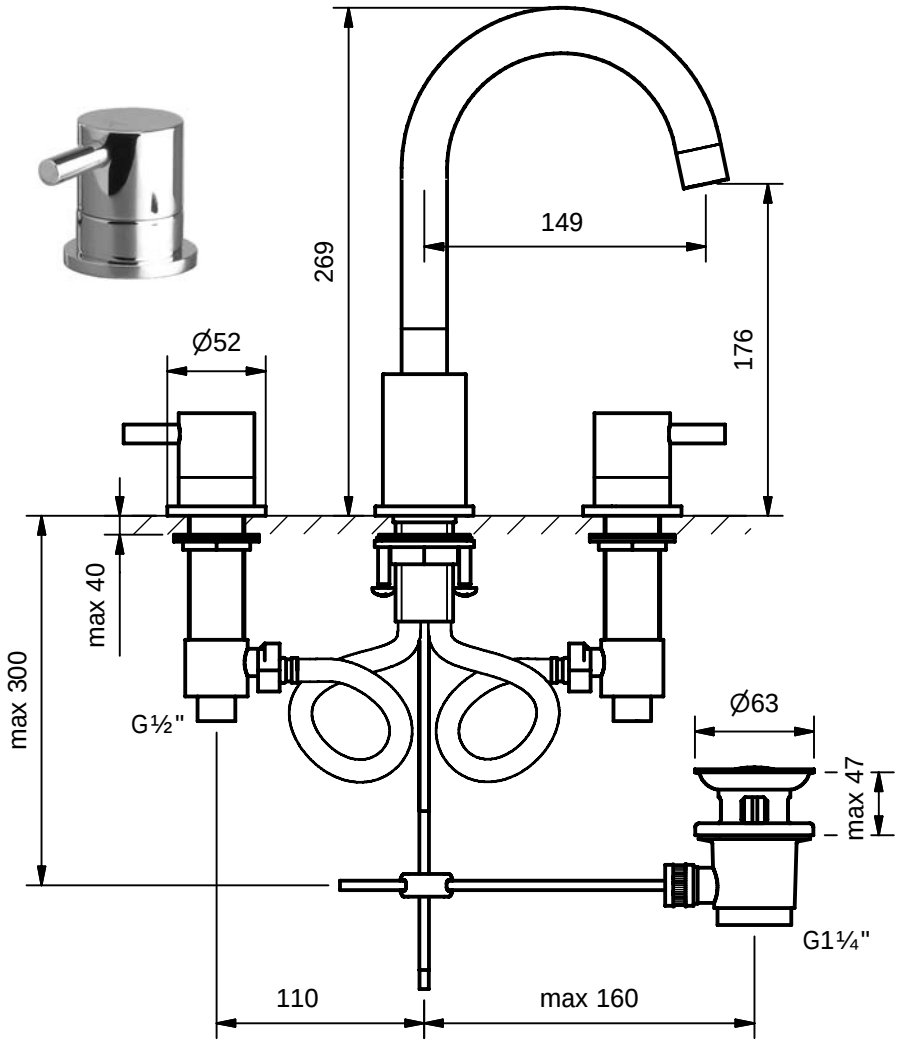

Series Eins+
C20301

3 hole deck mounted basin mixer ½", ceramic headparts, swivel spout, pop-up waste set 1¼"