CRESTIAL™
Wasser Musik

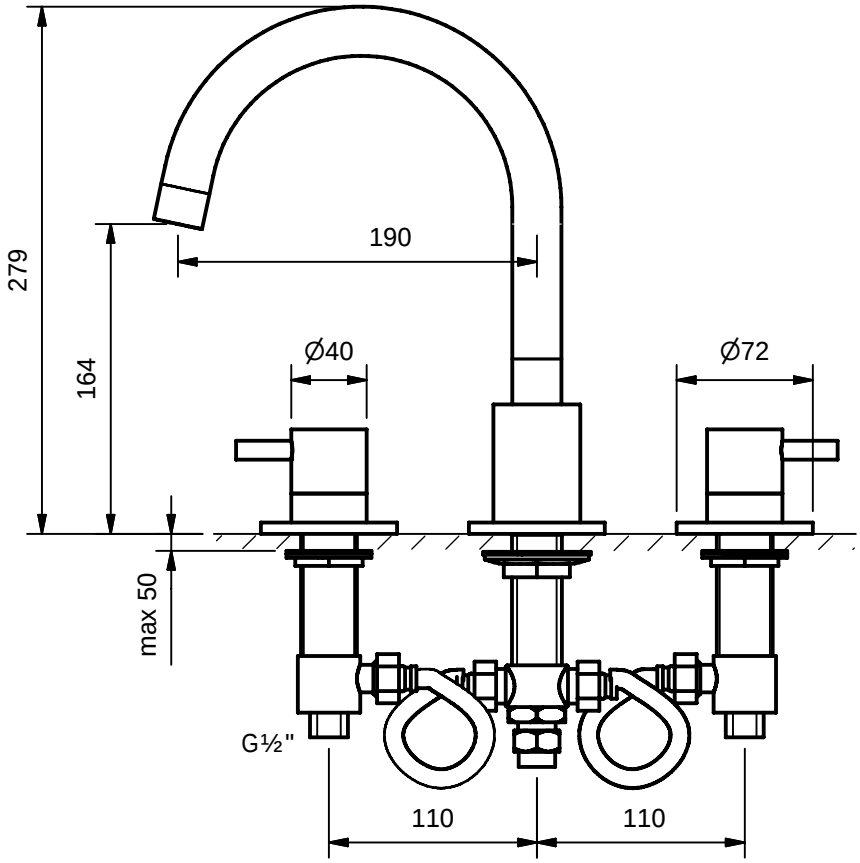

Series Eins+
C20502

3 hole deck mounted bath mixer ½", ceramic headparts, swivel spout