CRESTIAL™
Wasser Musik

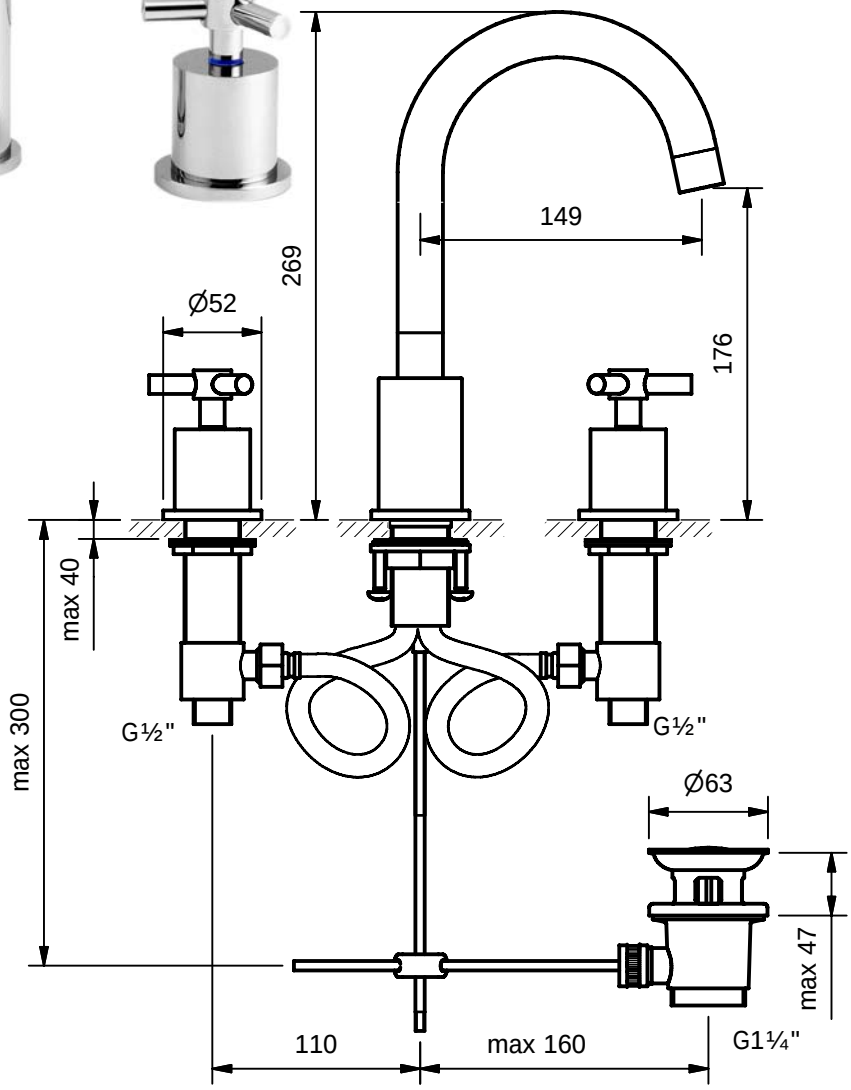

Series TRITONE
C20311

3 hole deck mounted basin mixer ½", ceramic headparts, swivel spout, pop-up waste 1¼"