CRESTIAL
Wasser Musik

PEPITA
C33241
Bidet mixer

FEATURES

Single lever bidet mixer ½"
· Ø35mm ceramic cartridge
· swivel outlet and aerator
· pop-up waste set 1¼"
· flexible feed tubes ½"
· chrome finish

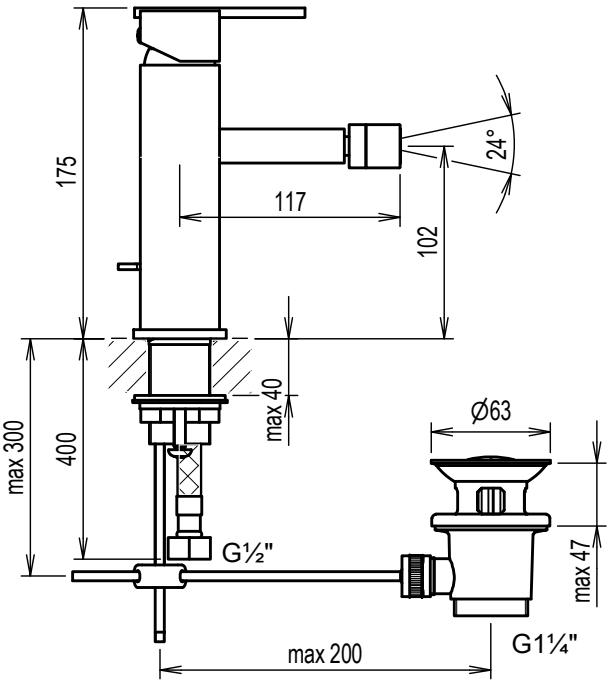

While we endeavor to provide accurate information, it may be subjected to errors and omissions.
We reserve the right to update any information without prior notice.