LINEA Collection
C20351BC
Basin mixer

CRESTIAL
Wasser Musik

FEATURES

- 3 hole installation
- brass body
- ½" brass headpart for flow and temperature control
- brass handles
- spout projection: 142mm
- aerator: mixes air with the water flow to produce bubbly water - reduce splashes and water consumption
- connection type: G½" connection
- M10x1 / G½" pressure resistant flexible connecting hoses (between side valves and spout)
- CRESTIAL mixers are designed to operate on a balanced hot / cold water pressure
- Sundance chrome finish

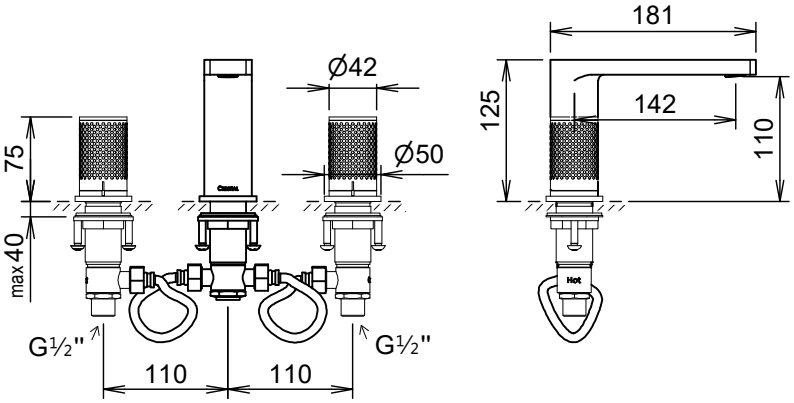

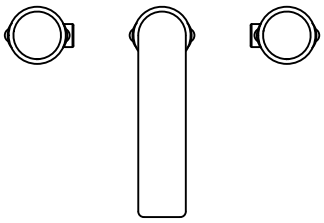

While we endeavor to provide accurate information, it may be subjected to errors and omissions. We reserve the right to update any information without prior notice.