IMAGE
C33123
Basin Mixer

CRESTIAL
Wasser Musik

FEATURES

• single hole installation
• brass body
• Ø35mm ceramic cartridge for flow and temperature control
• metal handle
• spout projection: 107mm
• aerator: mixes air with the water flow to produce bubbly water - reduce splashes and water consumption
• brass push rod and pop-up waste set
• connection type: G½" connection
• M10x1 / G½" pressure resistant flexible connecting hoses
• CRESTIAL mixers are designed to operate on a balanced hot / cold water pressure
• Sundance chrome finish

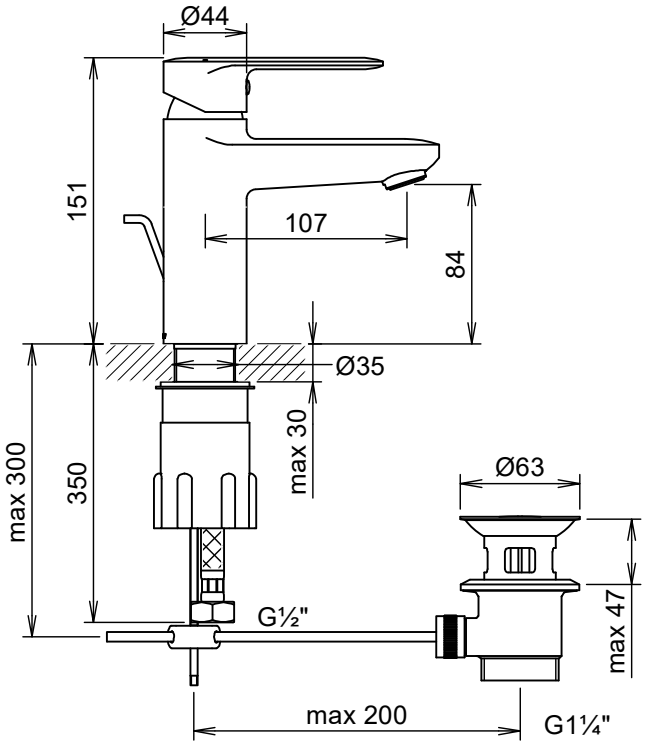

While we endeavor to provide accurate information, it may be subjected to errors and omissions. We reserve the right to update any information without prior notice.